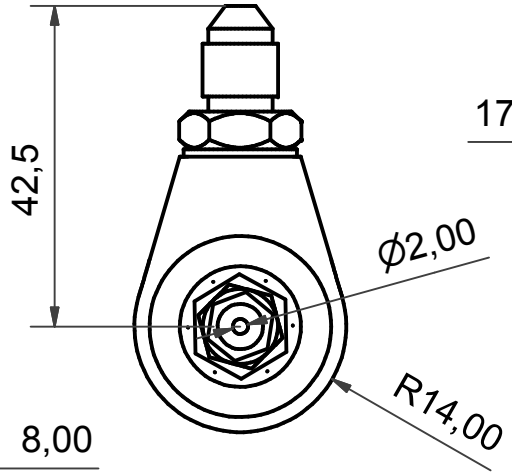

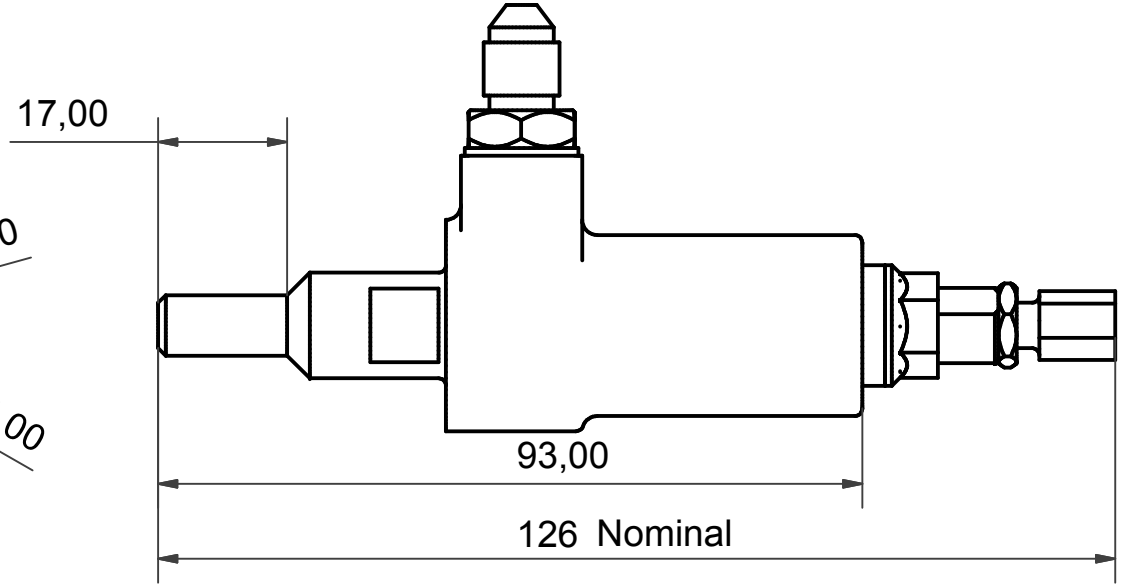

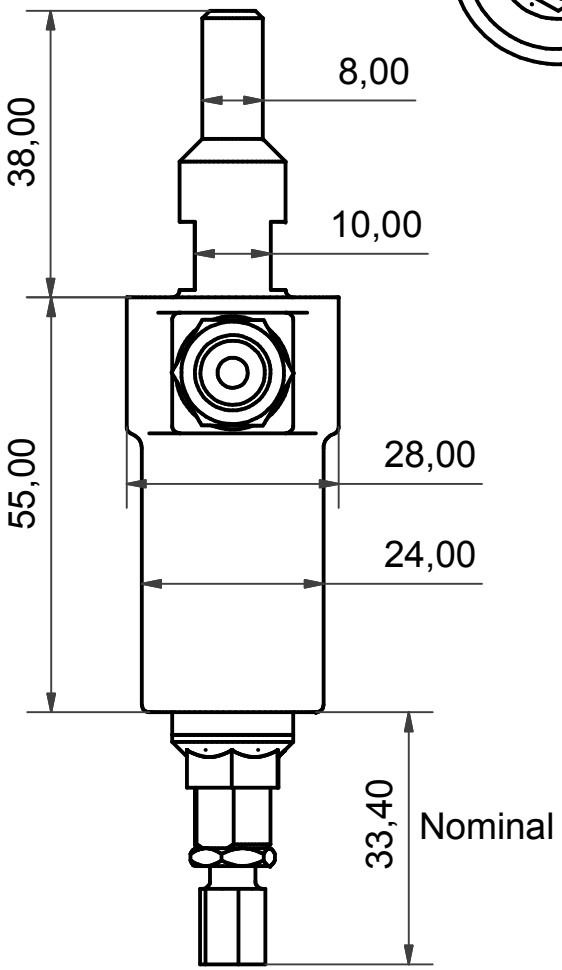

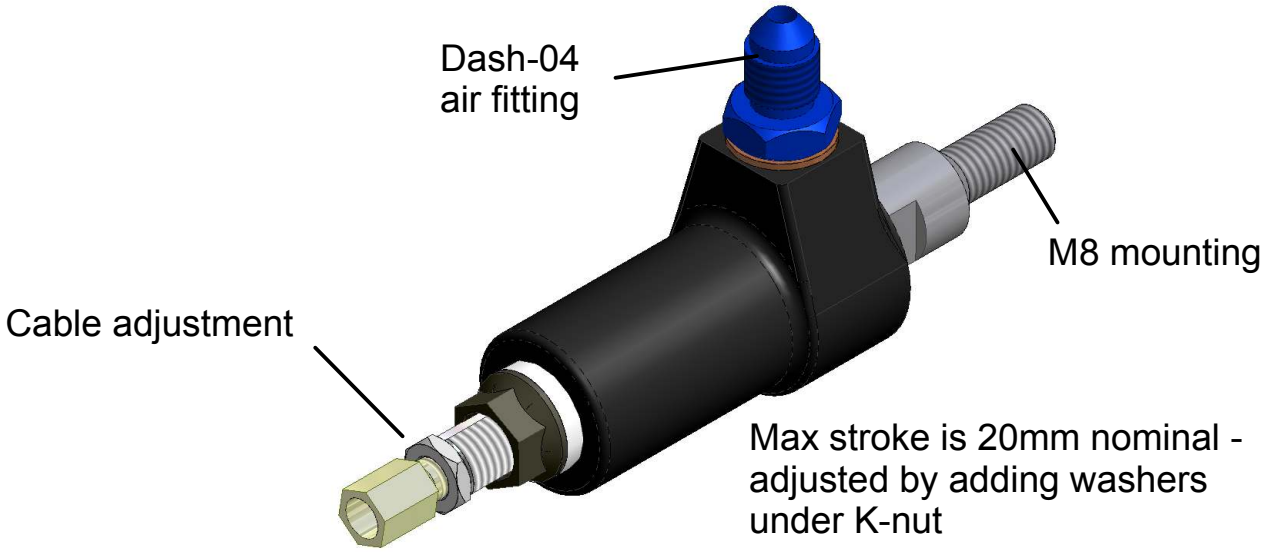

Designed by	Checked by	Approved by - date		Date	
Neil Wallace				31/12/2015	

Geartronics Ltd.	Pull Blipper - TB2020		
	Pull blipper	Edition 1.1	Sheet 1 / 1